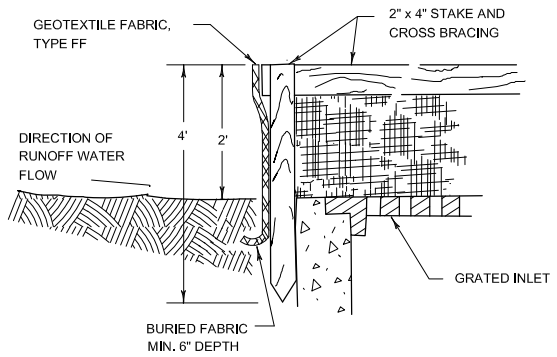

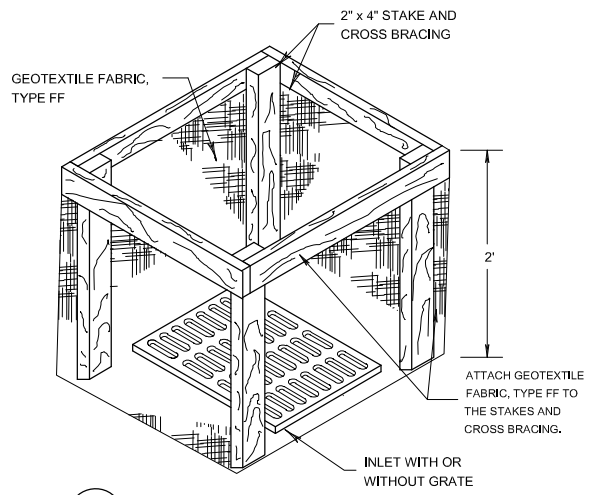

A / 6 INLET PROTECTION, TYPE A
NOT TO SCALE:

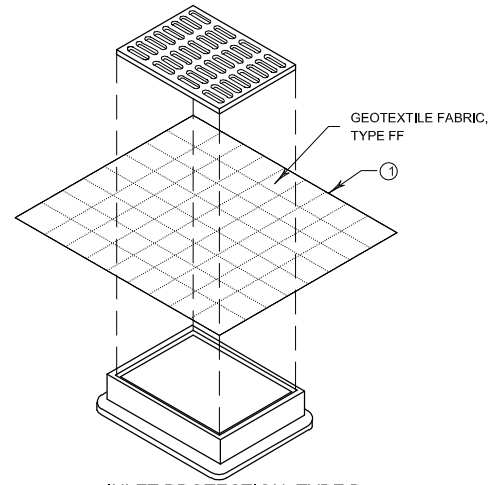

B / 6 INLET PROTECTION, TYPE B (WITHOUT CURB BOX)
NOT TO SCALE:
(CAN BE INSTALLED IN ANY INLET WITHOUT A CURB BOX)

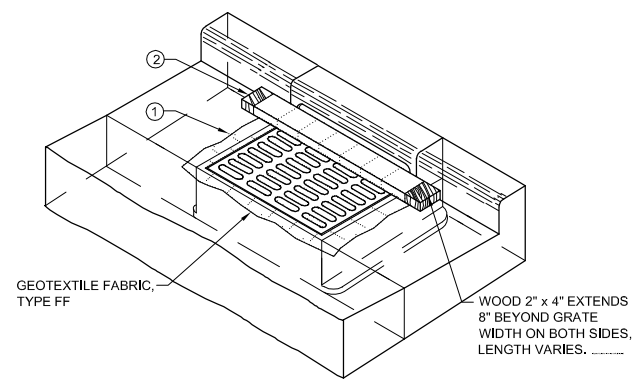

C / 6 INLET PROTECTION, TYPE C (WITH CURB BOX)
NOT TO SCALE:

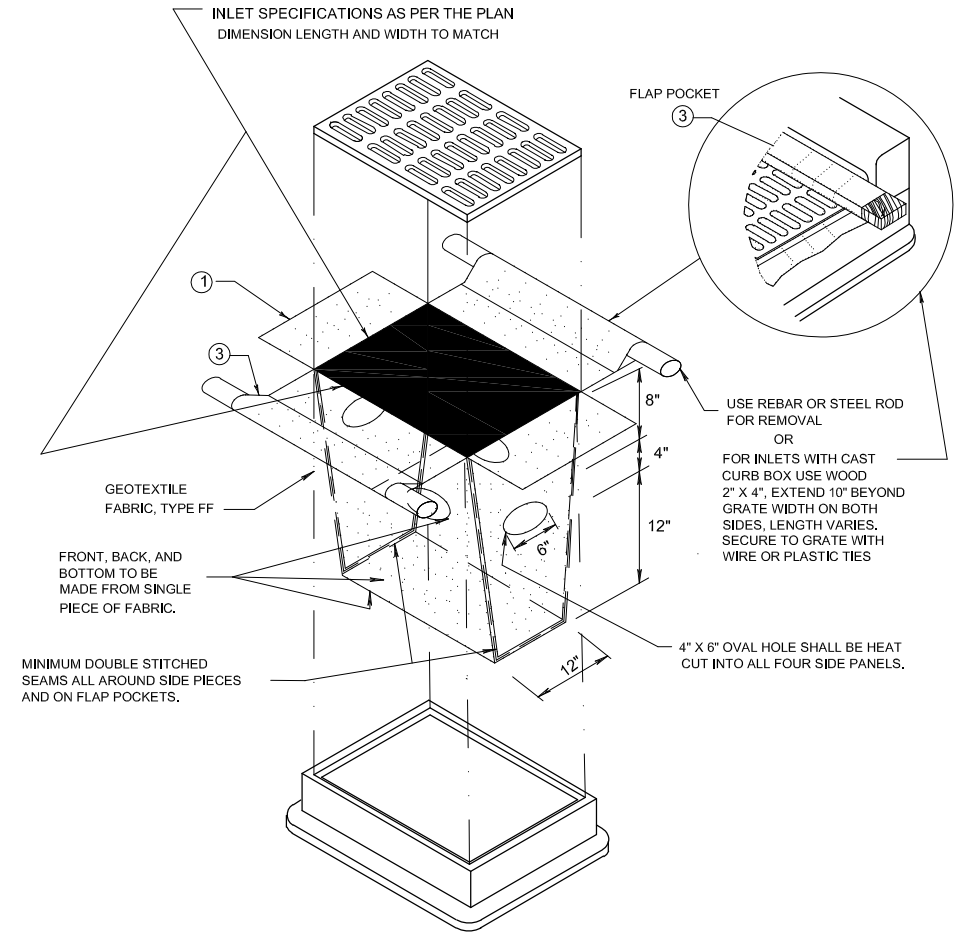

D / 6 INLET PROTECTION, TYPE D
NOT TO SCALE:
(CAN BE INSTALLED IN ANY INLET TYPE WITH OR WITHOUT A CURB BOX AS PER NOTE 2)

GENERAL NOTES

MANUFACTURED ALTERNATIVES APPROVED AND LISTED ON THE DEPARTMENT'S EROSION CONTROL PRODUCT ACCEPTABILITY LIST MAY BE SUBSTITUTED.

WHEN REMOVING OR MAINTAINING INLET PROTECTION, CARE SHALL BE TAKEN SO THAT THE SEDIMENT TRAPPED ON THE GEOTEXTILE FABRIC DOES NOT FALL INTO THE INLET. ANY MATERIAL FALLING INTO THE INLET SHALL BE REMOVED IMMEDIATELY.

1. FINISHED SIZE, INCLUDING FLAP POCKETS WHERE REQUIRED, SHALL EXTEND A MINIMUM OF 10" AROUND THE PERIMETER TO FACILITATE MAINTENANCE OR REMOVAL.
2. FOR INLET PROTECTION, TYPE C (WITH CURB BOX), AN ADDITIONAL 18" OF FABRIC IS WRAPPED AROUND THE WOOD AND SECURED WITH STAPLES. THE WOOD SHALL NOT BLOCK THE ENTIRE HEIGHT OF THE CURB BOX OPENING.
3. FLAP POCKETS SHALL BE LARGE ENOUGH TO ACCEPT WOOD 2X4.
4. CONSTRUCTION, OPERATION AND MAINTENANCE SHALL BE IN ACCORDANCE WITH WDNR CONSERVATION PRACTICE STANDARD 1060.

INSTALLATION NOTES

TYPE B & C

TRIM EXCESS FABRIC IN THE FLOW LINE TO WITHIN 3" OF THE GRATE.

THE CONTRACTOR SHALL DEMONSTRATE A METHOD OF MAINTENANCE, USING A SEWN FLAP, HAND HOLDS OR OTHER METHOD TO PREVENT ACCUMULATED SEDIMENT FROM ENTERING THE INLET.

TYPE D

DO NOT INSTALL INLET PROTECTION TYPE D IN INLETS SHALLOWER THAN 30", MEASURED FROM THE BOTTOM OF THE INLET TO THE TOP OF THE GRATE.

TRIM EXCESS FABRIC IN THE FLOW LINE TO WITHIN 3" OF THE GRATE.

THE INSTALLED BAG SHALL HAVE A MINIMUM SIDE CLEARANCE, BETWEEN THE INLET WALLS AND THE BAG, MEASURED AT THE BOTTOM OF THE OVERFLOW HOLES, OF 3". WHERE NECESSARY THE CONTRACTOR SHALL CINCH THE BAG, USING PLASTIC ZIP TIES, TO ACHIEVE THE 3" CLEARANCE. THE TIES SHALL BE PLACED AT A MAXIMUM OF 4" FROM THE BOTTOM OF THE BAG.

GENERAL NOTES

1. HORIZONTAL BRACE REQUIRED WITH 2" X 4" WOODEN FRAME OR EQUIVALENT AT TOP OF POSTS.
2. TRENCH SHALL BE A MINIMUM OF 4" WIDE & 6" DEEP TO BURY AND ANCHOR THE GEOTEXTILE FABRIC. FOLD MATERIAL TO FIT TRENCH AND BACKFILL & COMPACT TRENCH WITH EXCAVATED SOIL.
3. WOOD POSTS SHALL BE A MINIMUM SIZE OF 1"x 1" OF OAK OR HICKORY.
4. SILT FENCE TO EXTEND ACROSS THE TOP OF THE PIPE.
5. CONSTRUCT SILT FENCE FROM A CONTINUOUS ROLL IF POSSIBLE BY CUTTING LENGTHS TO AVOID JOINTS. IF A JOINT IS NECESSARY USE ONE OF THE FOLLOWING TWO METHODS: A) OVERLAP THE END POSTS AND TWIST, OR ROTATE, AT LEAST 180 DEGREES, B) HOOK THE END OF EACH SILT FENCE LENGTH.

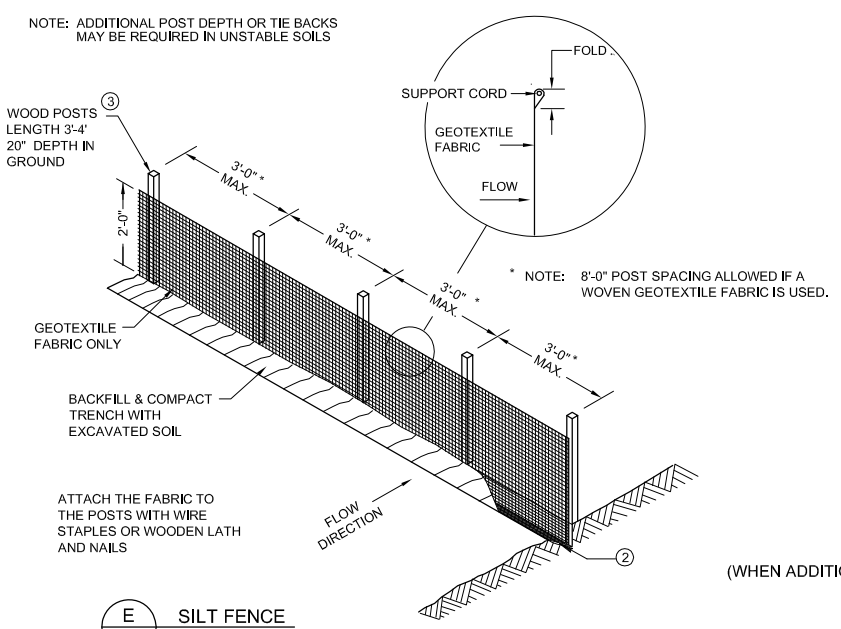

E / 6 SILT FENCE
NOT TO SCALE:

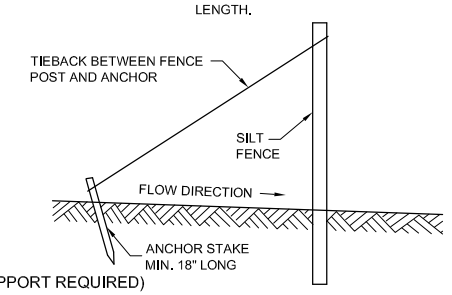

(WHEN ADDITIONAL SUPPORT REQUIRED)

F / 6 SILT FENCE TIE BACK
NOT TO SCALE:

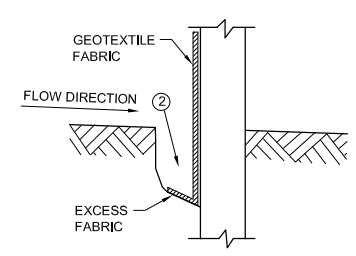

G / 6 TRENCH DETAIL
NOT TO SCALE:

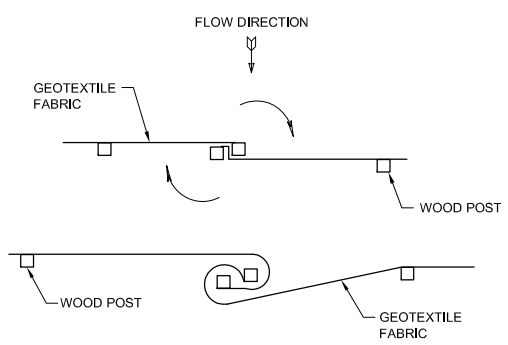

TWIST METHOD

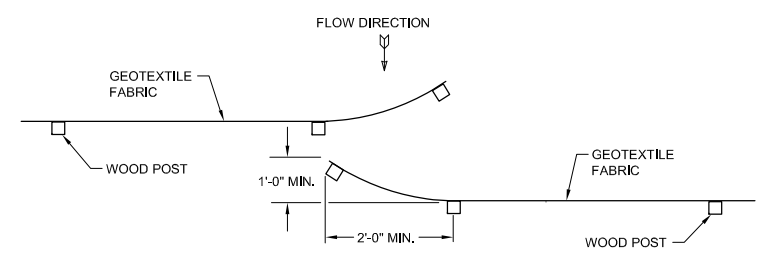

HOOK METHOD

H / 6 JOINING TWO LENGTHS OF SILT FENCE 5
NOT TO SCALE:

RELEASED FOR REGULATORY REVIEW

STS | AECOM

1035 Kepler Dr.
Green Bay, WI 54311

920-468-1978

www.stsconsultants.com

Copyright 2008 ©
By: STS Consultants, Ltd.

MALLARD LAKE LANDFILL
COMPREHENSIVE CORRECTIVE ACTION PLAN
DuPAGE COUNTY
HANOVER PARK, ILLINOIS
EROSION CONTROL PLANS

Issued

Rev	Date	Description

Designed:	-	10/24/2008
Drawn:	DJM	10/28/2008
Checked:	CSR	10/28/2008
Approved:	JAE	10/28/2008

PROJECT NUMBER
200704805

SHEET REFERENCE NUMBER
5-5

X:\PROJECTS\200704805\DWG\Corrective Action\G200704505-6_7.dwg; 10/31/2008 3:24:57 PM; CURTIN, KEVIN J.; STS.stb