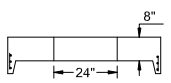

A/7 FLAT TOP SLAB
NOT TO SCALE:

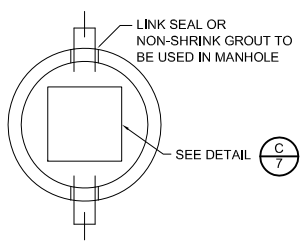

NOTES:

FOR HDPE PIPE, BEDDING MATERIAL SHALL BE PLACED AND COMPACTED UP TO SPRINGLINE OF PIPE, REMAINING BACKFILL SHALL BE NATIVE MATERIALS UNLESS SOIL IS ROCKY, THEN GRANULAR BACKFILL UP TO 12" ABOVE PIPE IS REQUIRED.

NO CONCRETE OR BLACKTOP MATERIAL SHALL BE USED TO BACKFILL. ALL TRENCHES SHALL BE BACKFILLED WITH GRANULAR MATERIAL THAT HAS BEEN MECHANICALLY COMPACTED IN LIFTS.

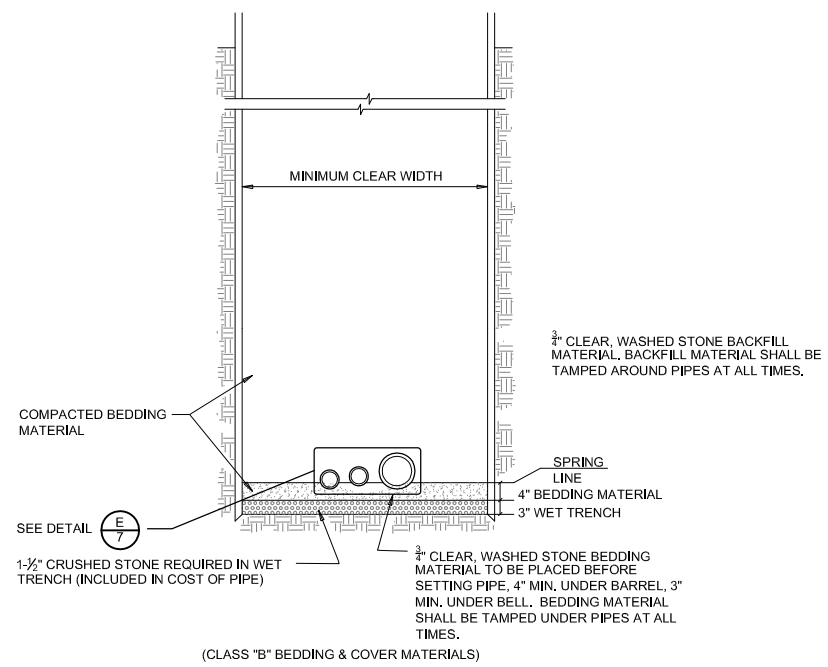

B/7 STANDARD TRENCH SECTION
NOT TO SCALE:

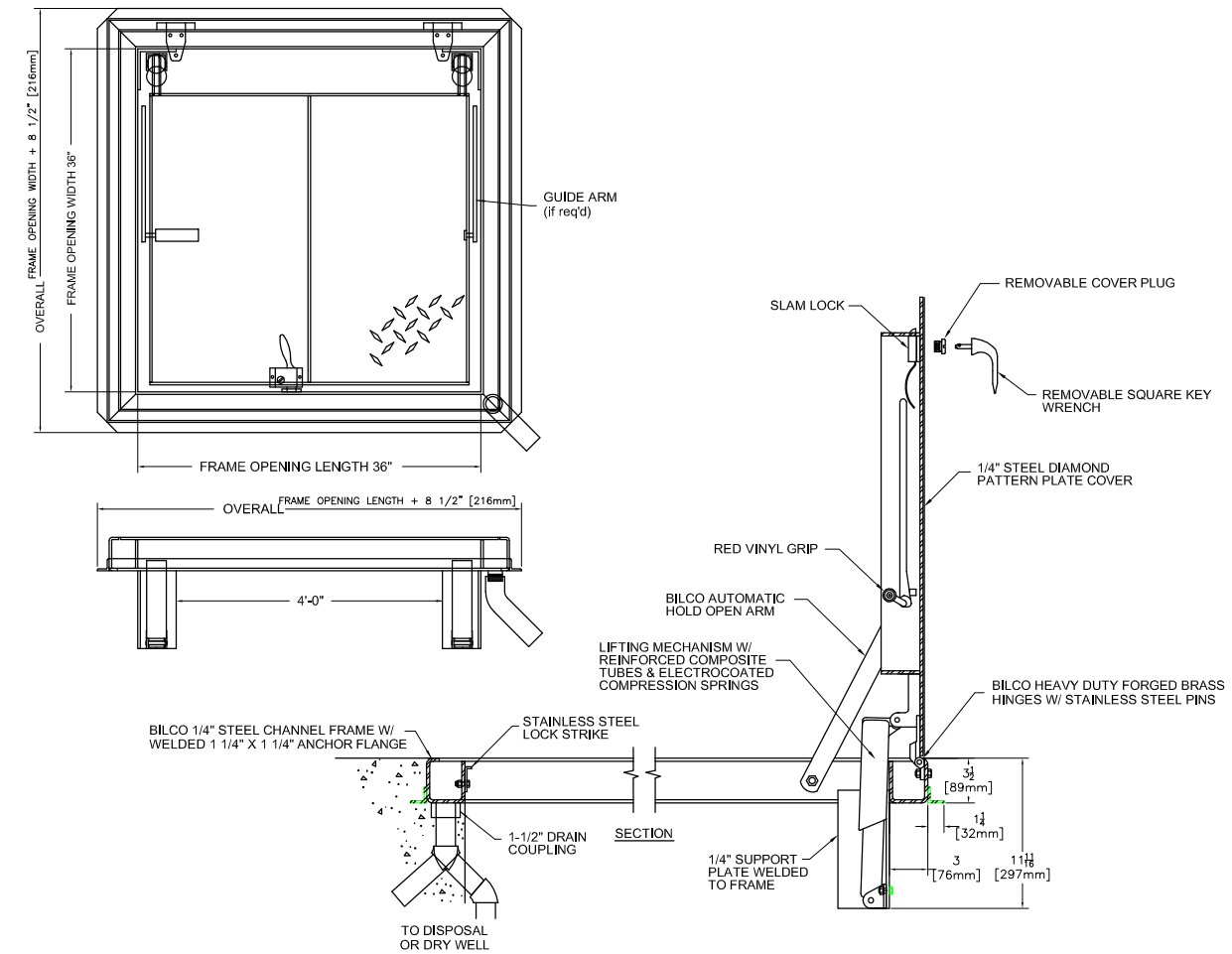

C/7 BILCO TYPE J DOOR (VAULT #1)
NOT TO SCALE:

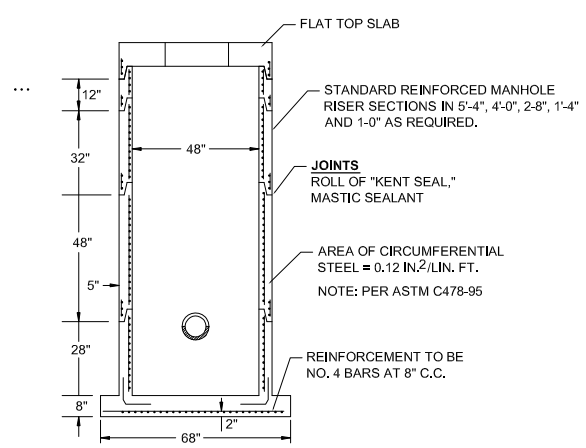

D/7 STANDARD MANHOLE
NOT TO SCALE:

PLACE MARKING TAPE AND TRACER WIRE PER STATE OR COUNTY OR VILLAGE REQUIREMENTS.

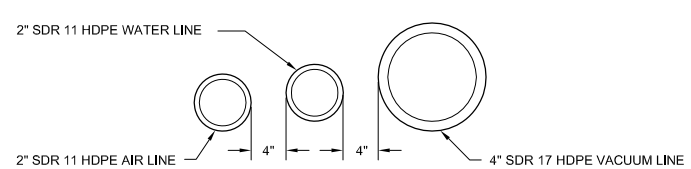

E/7 OPEN TRENCH LINE
NOT TO SCALE:

PLACE MARKING TAPE AND TRACER WIRE PER STATE OR COUNTY OR VILLAGE REQUIREMENTS.

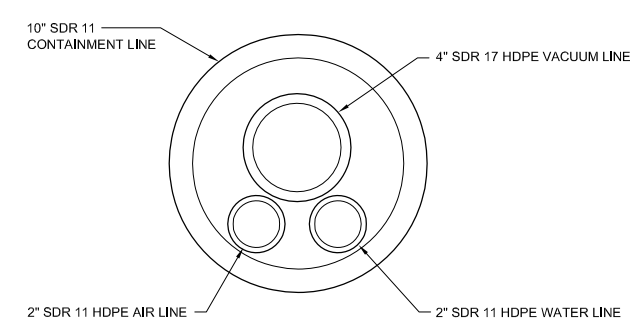

F/7 DIRECTIONAL BORING LINE
NOT TO SCALE:

RELEASED FOR REGULATORY REVIEW

STS | AECOM

1035 Kepler Dr.
Green Bay, WI 54311

920-468-1978

www.stsconsultants.com

Copyright 2008 ©
By: STS Consultants, Ltd.

MALLARD LAKE LANDFILL
COMPREHENSIVE CORRECTIVE ACTION PLAN
DuPAGE COUNTY
HANOVER PARK, ILLINOIS
MANHOLE AND TRENCH DETAILS

Issued

Rev	Date	Description

Designed:	-	10/24/2008
Drawn:	DJM	10/28/2008
Checked:	CSR	10/28/2008
Approved:	JAE	10/28/2008

PROJECT NUMBER
200704805

SHEET REFERENCE NUMBER
5-6

X:\PROJECTS\200704805\DWG\Corrective Action\G200704505-6_7.dwg, 10/31/2008 3:25:56 PM, CURTIN, KEVIN J., STS.stb