ACCOMPLISH MOST CHANGES OF PIPE DIRECTION OUTSIDE BY DEFLECTING PIPE IN ACCORDANCE WITH PIPE MANUFACTURER BEND RADIUS GUIDELINES

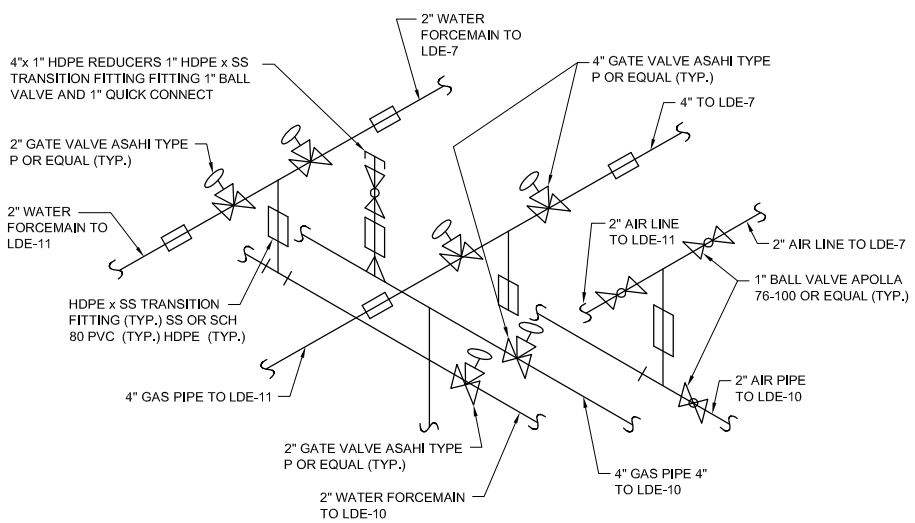

1/9 VALVE VAULT #1
NOT TO SCALE:

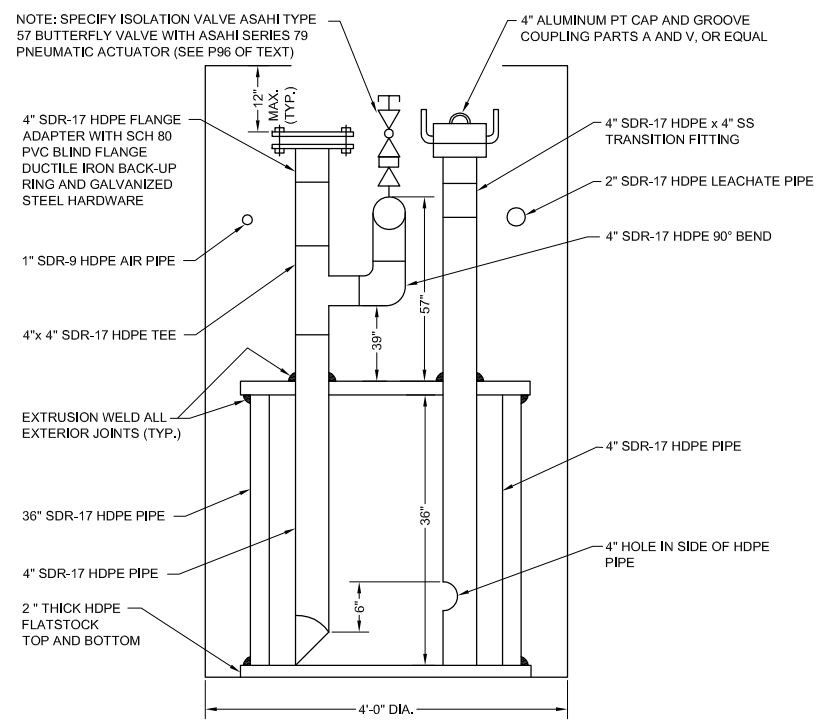

2/9 MH-4 SECTION
NOT TO SCALE:

NOTE:
4"x 1" HDPE REDUCER(S) 1" HDPE x SS TRANSITION COUPLING, 1" BALL VALVE AND 1" QUICK CONNECT COUPLING

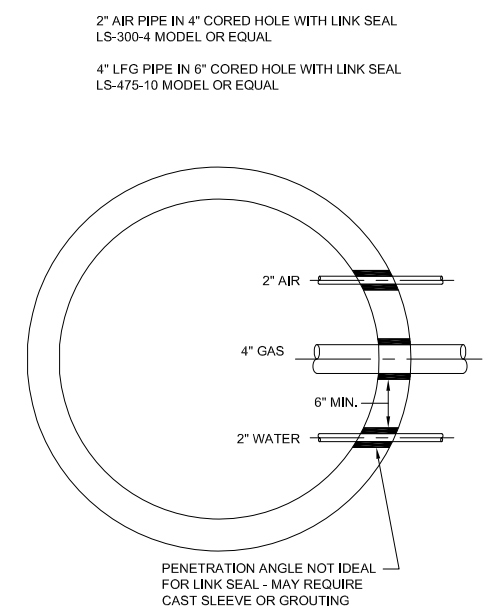

3/9 MANHOLE PENETRATIONS
NOT TO SCALE:

RELEASED FOR REGULATORY REVIEW

STS | AECOM

1035 Kepler Dr.
Green Bay, WI 54311

920-468-1978

www.stsconsultants.com

Copyright 2008 ©
By: STS Consultants, Ltd.

MALLARD LAKE LANDFILL
COMPREHENSIVE CORRECTIVE ACTION PLAN
DuPAGE COUNTY
HANOVER PARK, ILLINOIS
EXTRACTION SYSTEM DETAILS

Issued

Rev	Date	Description

Designed:	-	10/24/2008
Drawn:	DJM	10/28/2008
Checked:	CSR	10/28/2008
Approved:	JAE	10/28/2008

PROJECT NUMBER
200704805

SHEET REFERENCE NUMBER
5-8

X:\PROJECTS\200704805\DWG\Corrective Action\G200704505-PROCESS-DETAILS_8_9.dwg; 10/31/2008 3:27:21 PM; CURTIN, KEVIN J.; STS.stb